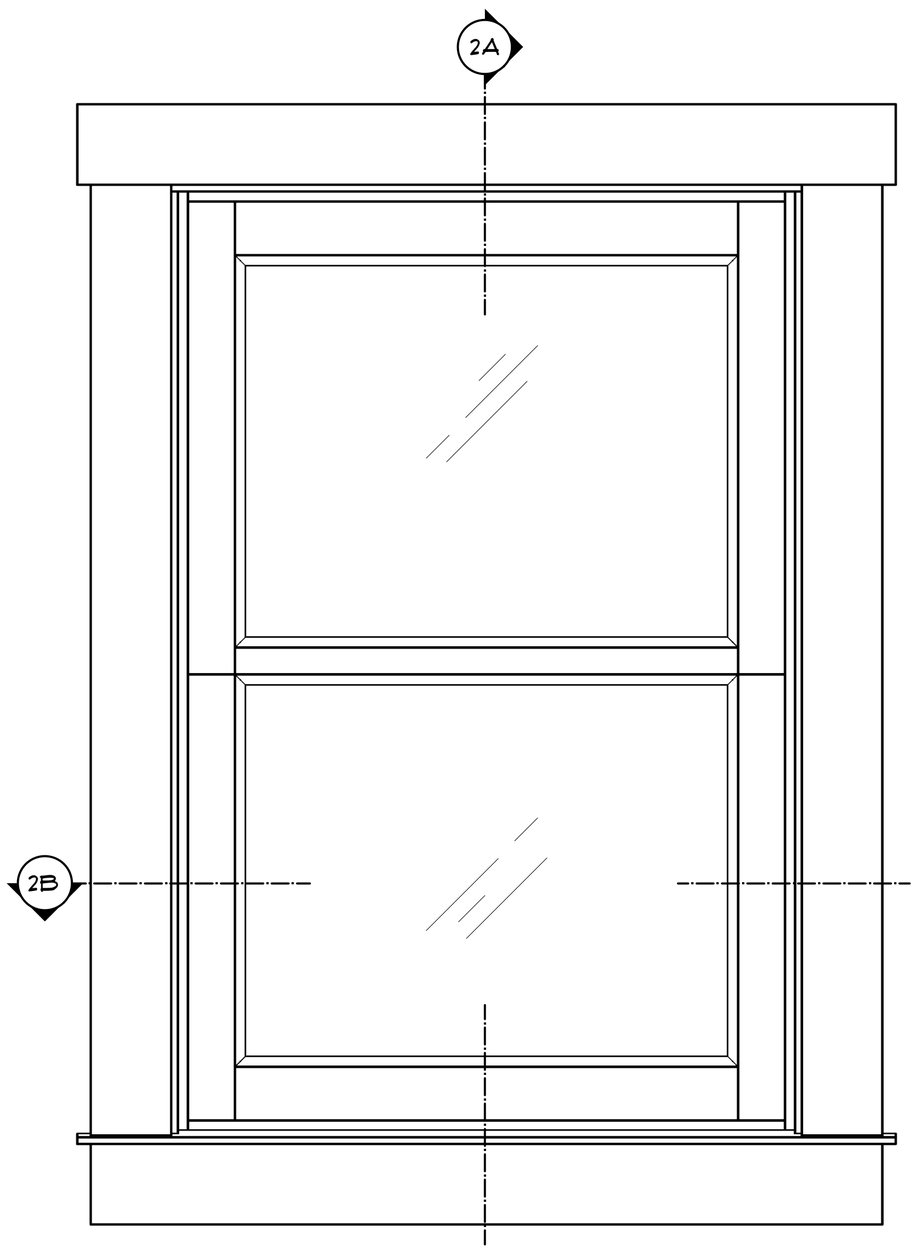

2 DETAIL ELEVATION - WINDOW RIGHT
SCALE 3"=1'

WOOD WINDOWS
BUILD THREE OF THEM

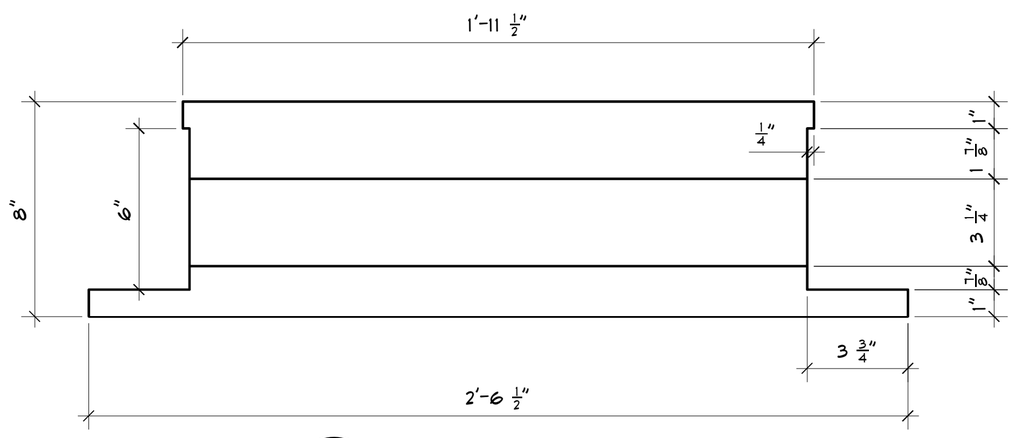

2C SILL DETAIL
SCALE 3"=1'

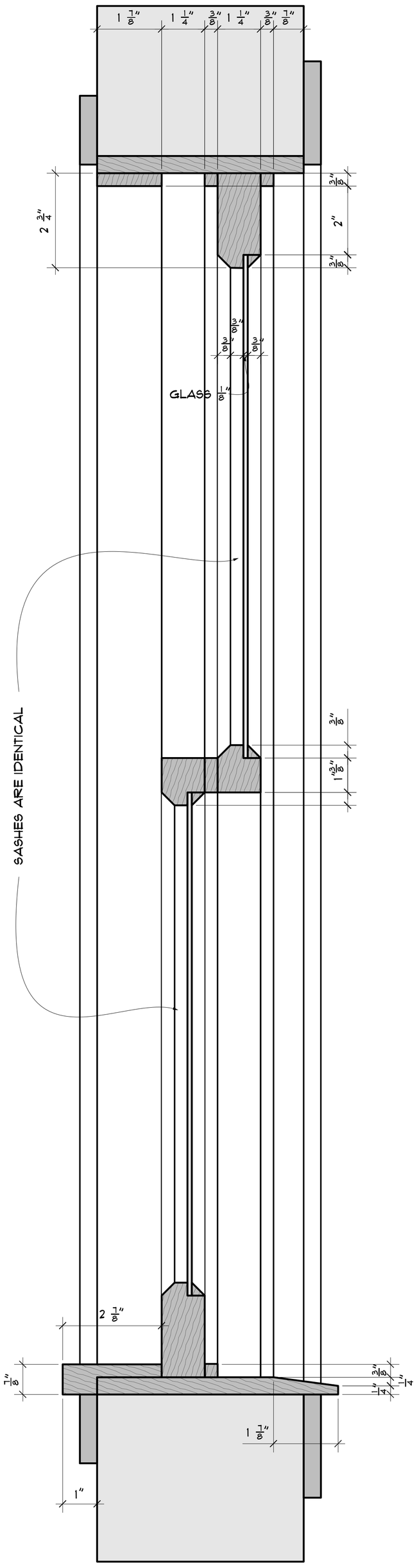

2A VERT. SECTION THROUGH WINDOW
SCALE 6"=1'

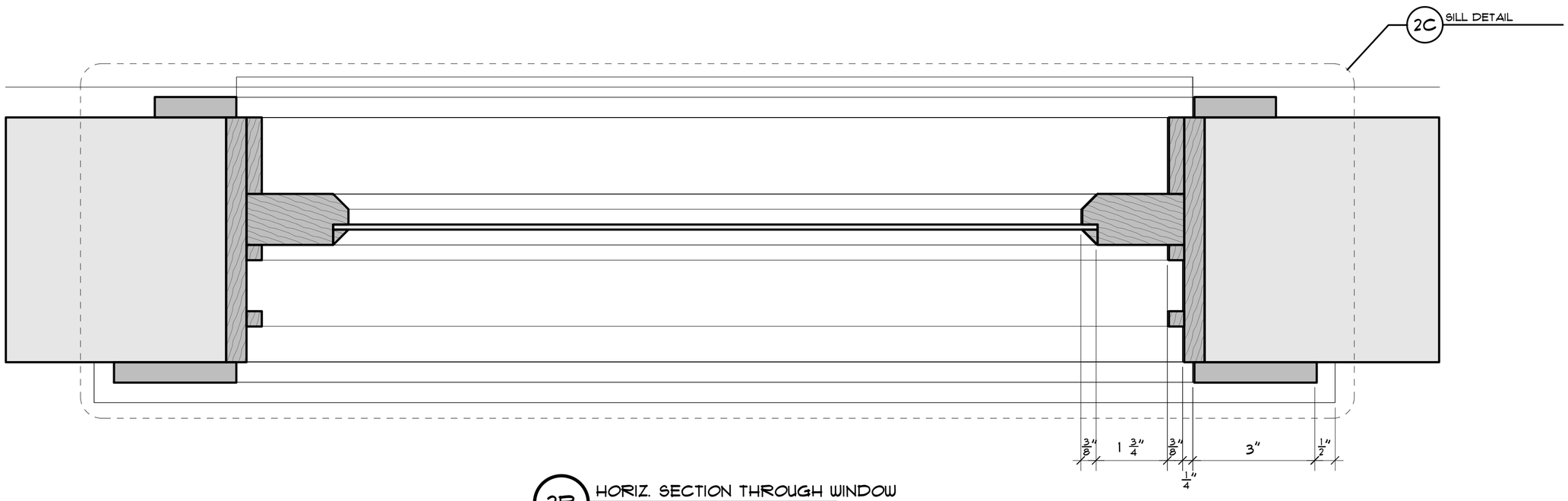

2B HORIZ. SECTION THROUGH WINDOW
SCALE 6"=1'

BLOSSOM MERZ	SET NAME MARS MINE GUARD SHACK			SHEET
	DRAWING WINDOW DETAILS	REVISION 2		05
	LOCATION 56D SANTA FE	DATE 8/3/2024		